B607 Series
Swimming Pool Pump Controller
User Manual

V 1.2.1

Preface

Thanks for choosing our B607 series swimming pool pump controller, we will provide you with a warm and attentive service.

B607 is a intelligent controller which is specifically designed for swimming pool pump, with the function of auto/manual mode and multi-speed for multi-time sections.

This manual provides you the main features, parameter setting and operation methods of B607 series. Before operating please read this manual and understand the contents of this manual to ensure proper use of B607 series.

Contents

1 SAFETY PRECAUTIONS

B607 is a new power electronic product, please read the operation manual carefully before using to keep your safety and make sure proper operation.

In this manual, the safety precautions were sorted to "**WARNING**" and "**CAUTION**".

WARNING: Wrong using may result in death or serious personal injury.

CAUTION: Wrong using may result in the damage of controller or system.

WARNING
● Please don't dismantle, change the product, or may cause electric shock, fire hazard and personal injury; ● Please don't open the cover during the running of controller; ● Please don't put wire, bar of metal, filaments etc. into the controller so as not to cause a short circuit or get an electric shock.

CAUTION
● Please don't make withstand voltage testing for the controller; ● Never connect AC power to output UVW terminals; ● If the internal components of the controller were influenced or damaged by static, please do not to touch; ● The motor, controller and power specifications should be matching, otherwise it could cause abnormal operation even burn out the device; ● If the controller appears serious vibration, noise, heat or peculiar smell in the first operation, please cut off the power immediately and contact suppliers or service center later; ● Please don't install the controller in the environment with direct sunlight, rain, frost or snow in case of deformation or damage.

2 PRODUCT INTRODUCTION

2.1 Features

- Professional design based on the swimming pool water supply users' needs, simplicity of operation.
- According to the real-time section to run automatically without manual operation after parameters were set correctly.
- Easy to user switching speed gears in the manual mode.

2.2 Model Specification

B607B2-2 002-1

1: Single-phase output, other else: Three-phase output
Power Symbol 002: 2HP/1.5KW
Voltage Class 2: 220VAC 4: 380VAC
Series Number of Swimming Pool Pump Controller
B2 is expressed as waterproof: IP54

2.3 External Dimension

Model No.	Rated Input Voltage (V)	Rated Input Current (A)	Rated Output Current (A)	Motor Power (kW)
B607B2-2001-1	1AC: 220V -15%~+15%	8.2	5.3	0.75
B607B2-20015-1		14.2	6.5	1.1
B607B2-2002-1		23.0	10.0	1.5
B607B2-2001	1AC: 220V -15%~+15%	8.2	4.5	0.75
B607B2-2002		14.2	11.0	1.5
B607B2-2003		23.0	15.0	2.2
B607B2-2001	3AC: 220V -15%~+15%	5.0	4.5	0.75
B607B2-2002		7.7	7.0	1.5
B607B2-2003		11.0	10.0	2.2
B607B2-2005		17.0	16.0	3.7
B607B2-2007		21.0	20.0	5.5
B607B2-4001	3AC: 380V -15%~+15%	3.4	2.5	0.75
B607B2-4002		5.0	3.7	1.5
B607B2-4003		5.8	5.0	2.2
B607B2-4005		10.0	9.0	4.0
B607B2-4007		15.0	13.0	5.5
B607B2-4010		20.0	17.0	7.5

2.4 External Dimension

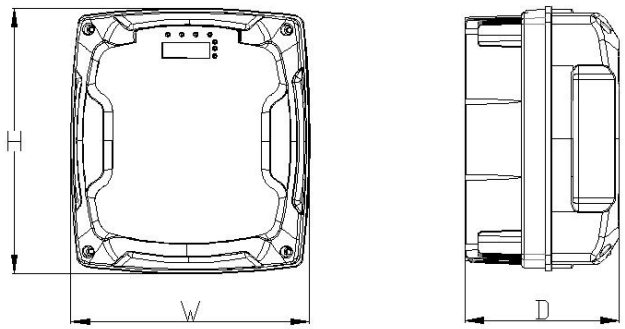

Power (kW)	External Dimension		
	H (mm)	W (mm)	D (mm)
0.75~2.2	216	195	154
4.0~7.5	282	255	165

3 ENVIRONMENTAL REQUIREMENT

1. Environment temperature range: -10℃~+40℃. Controller will be derated if ambient temperature exceeds 40℃.
2. Prevent rain drops, moist environment, oil fog, salt erosion, corrosive gas, etc.
3. Prevent direct sunlight, keep away from radiation source.
4. Prevent violent vibration or sudden impact.
5. Lower than 1000m installation altitude, it will be derated when the altitude is higher than 1000m.

CAUTION

- When moving the controller please lift by its base and don't lift by the panel. Otherwise may cause the main unit fall off which may result in personal injury.
- Install the controller on the fireproofing material (such as metal) to prevent fire.
- When power off, should not install the controller until the power indicator light was extinguished, which can ensure the device has been discharged completely.
- Disconnect all power line before opening front cover of unit. Wait at least 5 minute until DC Bus capacitors discharge.

4 PRODUCT FUNCTIONAL PERFORMANCE

Input Voltage	220V/380V±15%
Output Voltage	0~as input voltage

Function	Instruction
LED	● Parameter display and malfunction display; ● Display the current preset speed/DC bus voltage/system time when stopping; ● Display the current actual speed/preset speed/output power/DC bus voltage/output current/system time
Programmable Variable Speed Max.8 Gear	● 8 gear programmable time section, running according to system real-time with clock; ● Time section has independent start-end period; ● Time section has independent speed setting
4 Manual Gear, Speed Range: 0~2950RPM	● Optional 4 manual gear； ● Speed is set by parameter； ● Button for auto/manual shift, under manual mode, change gears by the same button 
Power-on Restart	If there is a power failure, restart when power on; Whenever the pump is requested to start in automatic mode, the B607B will operate the pump at 2950rpm for 10 minutes to ensure that the pump is fully primed
Lock Screen Time	Password - lock screen time is 5 minutes
Protection	Over Current/Over Voltage/Under Voltage/Overheat/Overload etc. protection

5 How to USE

5.1 Wiring

1. Single Phase 220V Motor Wiring Method

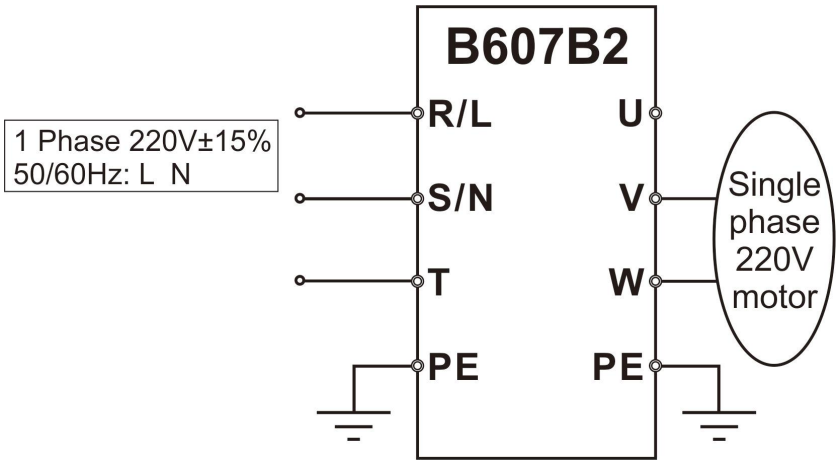

Figure 5.1.1 Single phase 220V motor wiring method

2. Three Phase 220V Motor Wiring Method

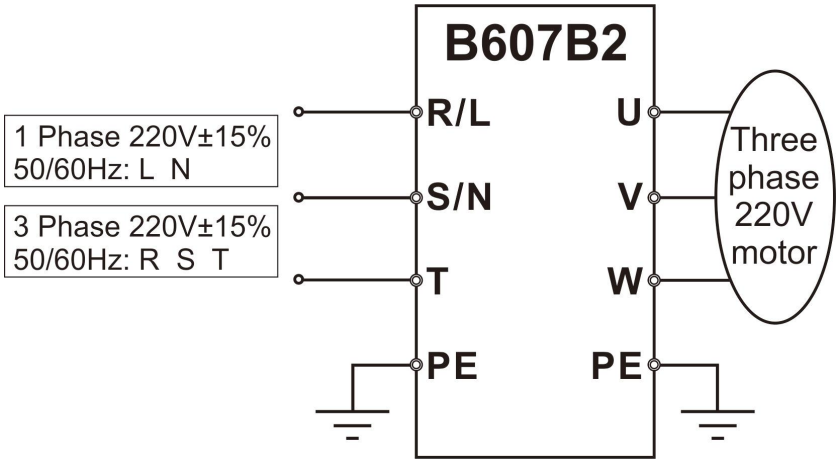

Figure 5.1.2 Three phase 220V motor wiring method

3. Three Phase 380V Motor Wiring Method

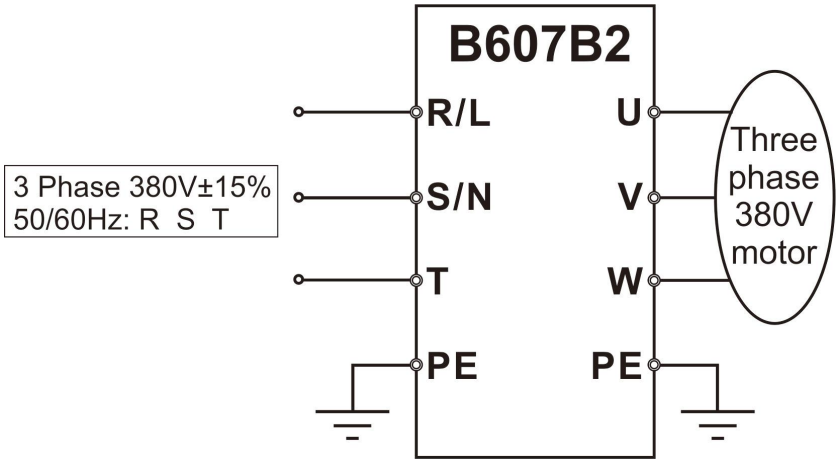

Figure 5.1.3 Three phase 380V motor wiring method

In order to keep safety and prevent electric shock and fire, PE must be grounded with ground resistance. Ground wire should be big and short, and it is better to use copper wire (>3.5 mm^2). Furthermore, reliable grounding is the simplest, most effective and minimum cost solution for EMC problems, so it enjoys priority in all EMC methods.

5.2 Operating Panel

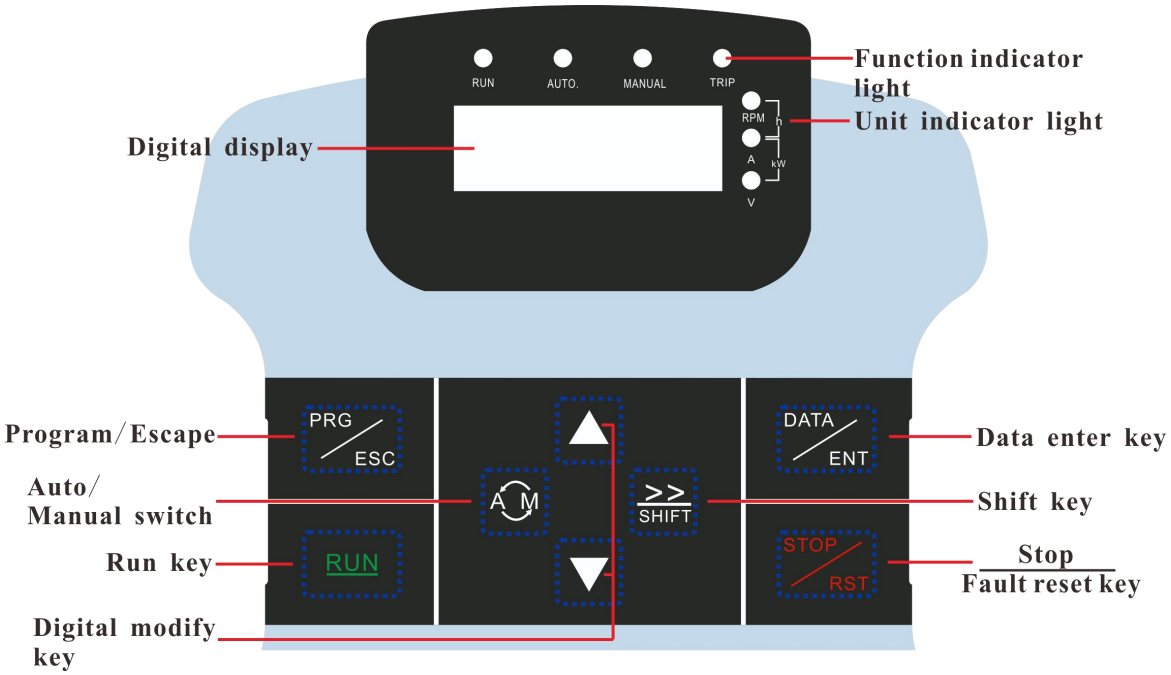

Figure 5.2.1 Keypad schematic diagram

5.3 Button Instruction

Interface	Button	Function
Primary Interface	>> SHIFT	Shift display of each monitoring parameter
	PRG ESC	Enter first-level menu
	A M	Auto/Manual Shift
	RUN	Running
	STOP RST	Stop/reset
First-level Menu	PRG ESC	Exit to Primary Interface
	DATA ENT	Access the current parameter
	▲ ▼	Increase/Decrease
	>> SHIFT	Data Shift
Secondary -level Menu	PRG ESC	Cancel parameter setting, exit to first-level menu and remain previous setting
	DATA ENT	Affirm parameter， exit to first-level menu and move to the next parameter

	▲ ▼	Increase/Decrease
	>> SHIFT	Data Shift

5.4 Indicator Instruction

1. Function Indicator

Name	Introduction
RUN	Extinguished: Stop status; Light on: Operating status
AUTO.	Light on: Automatic control
MANUAL	Light on: Manual control
TRIP	Light on: Fault status; Extinguished: Normal operation status

2. Unit Indicator

Symbol	Introduction
RPM	Rotation speed unit, light on when displaying speed and flickering when setting speed
A	Current Unit, on light when displaying current
V	Voltage Unit, on light when displaying voltage
kw	Reserved
h	Time unit, RMP & A lights on when displaying the current time; flickering when setting speed.

5.5 Operation Instruction

1. Auto/manual mode:

(1) Under auto. mode, press A M system will enter into manual mode, manual lamp is light on, gear is the gear before switching to auto. mode (it defaults to the first-speed when you enter **MANUAL** for the first time), the controller will maintain the status (run/stop) of auto. mode.

Below for manual mode operation and stop state display interface:

Running state (display the current working speed)	Stop state (display the set speed of the current gear)	Remark
	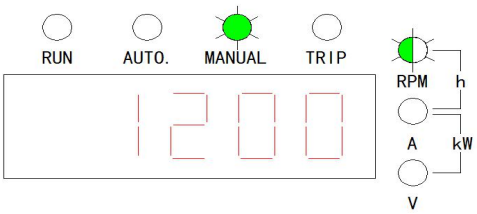	○: Light off : Light flickering : Light on

Figure 5.5.1 The display interface of manual mode

In manual mode, whatever it is running or in stopped the controller can be switched to different speed by ▲and▼ key and the parameters of manual speed is br-18~br-21. At the same time, the controller can keep the original state (run/stop) after modifying the parameters above.

(2) In manual mode, press A M system will enter into auto. mode and run at the rate corresponded to the real-time section. At the same time, the controller can keep the original state (run/stop) after switching the working operation.

Below for the auto. control mode operation and stop state display interface:

Running state (display the current working speed)	Stop state (display the set peed of the current time）	Remark
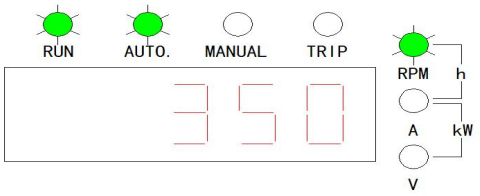	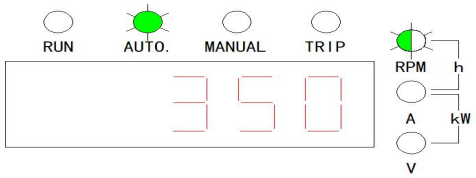	○: Light off : Light flickering : Light on

Figure 5.5.2 The display interface of auto. mode

2. Motor rotating direction setting

Motor's rotating direction is forward by default, when need to set the motor rotating direction as reverse, set the parameter: br-01=1, there will display "-" at interface.

Note: Only in the stop state, the motor rotating direction can be set.

The display of reversal operation in auto. mode:

Running state (display the current working speed)	Stop state (display the set peed of the current time）	Remark
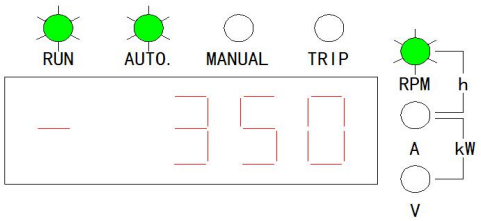	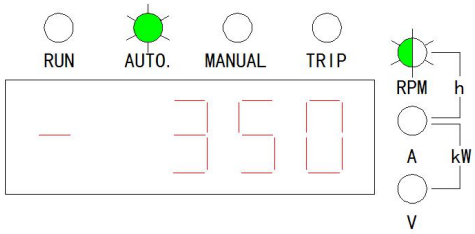	○: Light off : Light flickering : Light on

Figure 5.5.3 Reversal operation in auto. mode

The display of reversal operation in manual mode:

Running state (display the current working speed)	Stop state (display the set peed of the current time）	Remark
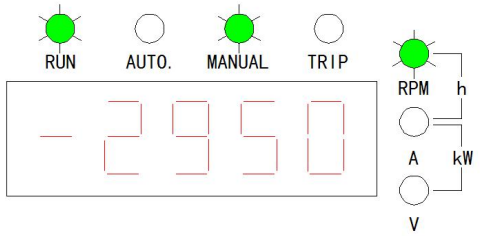	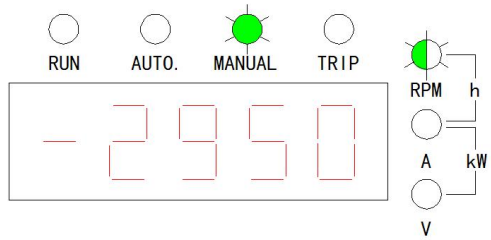	○: Light off : Light flickering : Light on

Figure 5.5.4 Reversal operation in manual mode

3. Check sate of parameter

This setting parameter “br-24” determines the content of displaying, including Running Speed/Preset Speed/Output Power/DC Bus Voltage/Output Voltage/Output Current/System Time, each item can be set to be display or hidden as well as checked through **SHIFT** button.

4. Power-on

Initialization: Displays “b-607”.

Enter the primary interface after initialization is complete, and the controller is be on standby mode. If you use the **Power-on restart** function, the controller can restore the state at the power off last time.

5. Run

In the stopped state, press **RUN** key to enter the running state.

6. Stop

In running status, press **STOP/RST** key to stop and enter the stopped state.

7. Modify parameter

Below is the method of modifying parameters:

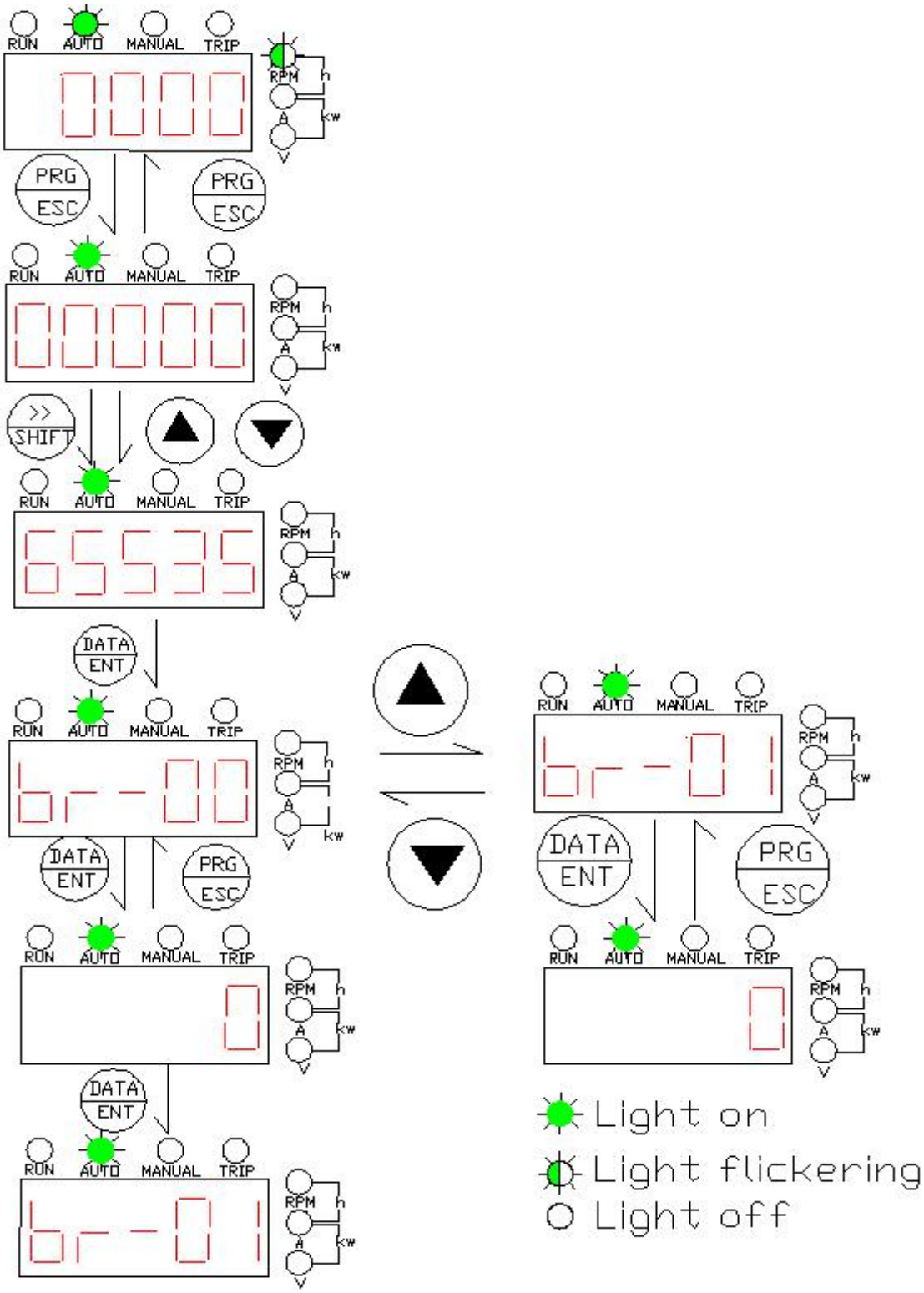

Figure 5.5.5 Flow chart of parameter setting

8. The system time settings

It is 24 hours type, such as 05-10 means it is at 5:10 am. In manual or automatic mode, we can modify system time in the following way:

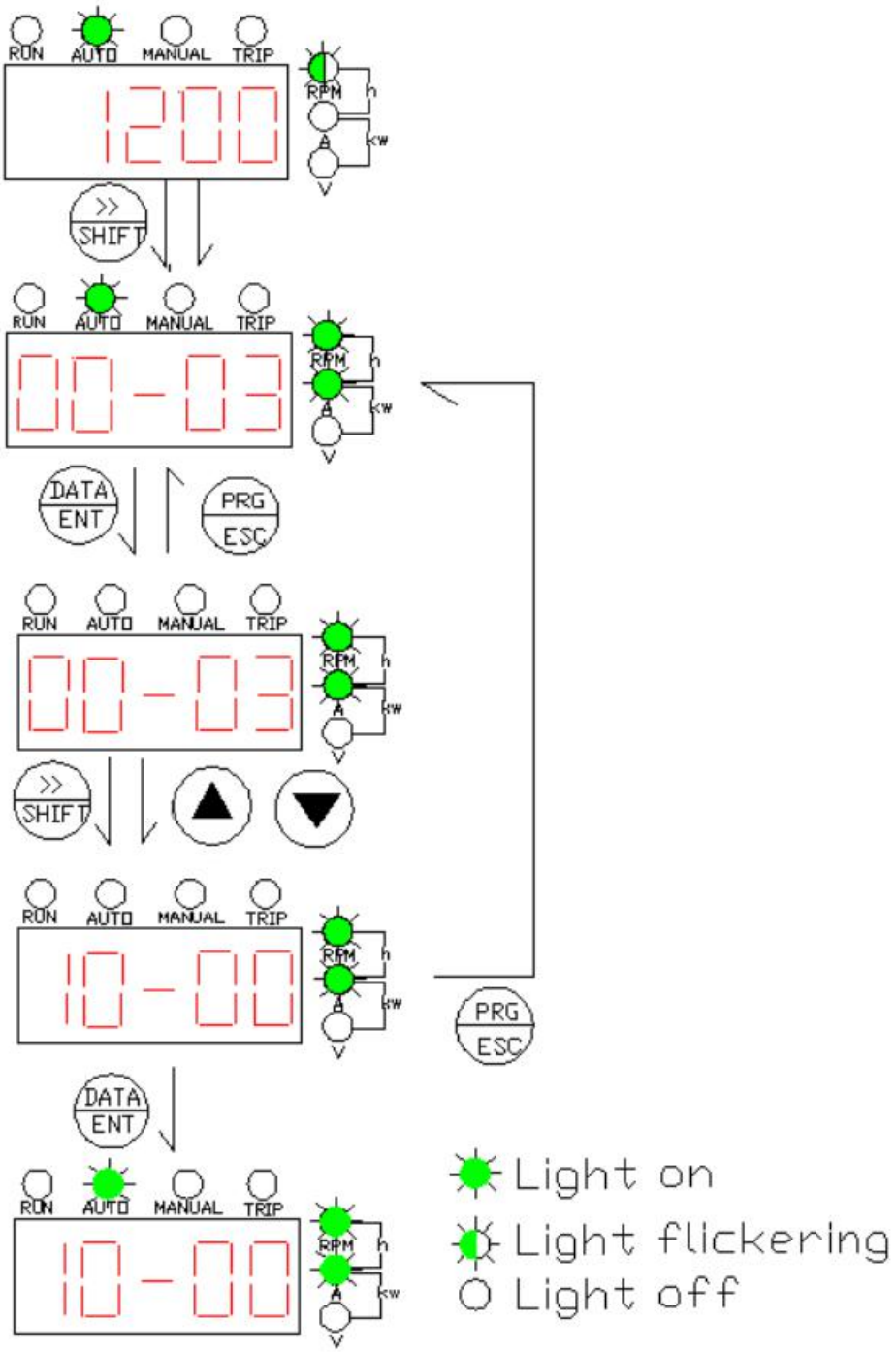

Figure 5.5.6 Flow chart of time setting

5.6 Quick Testing

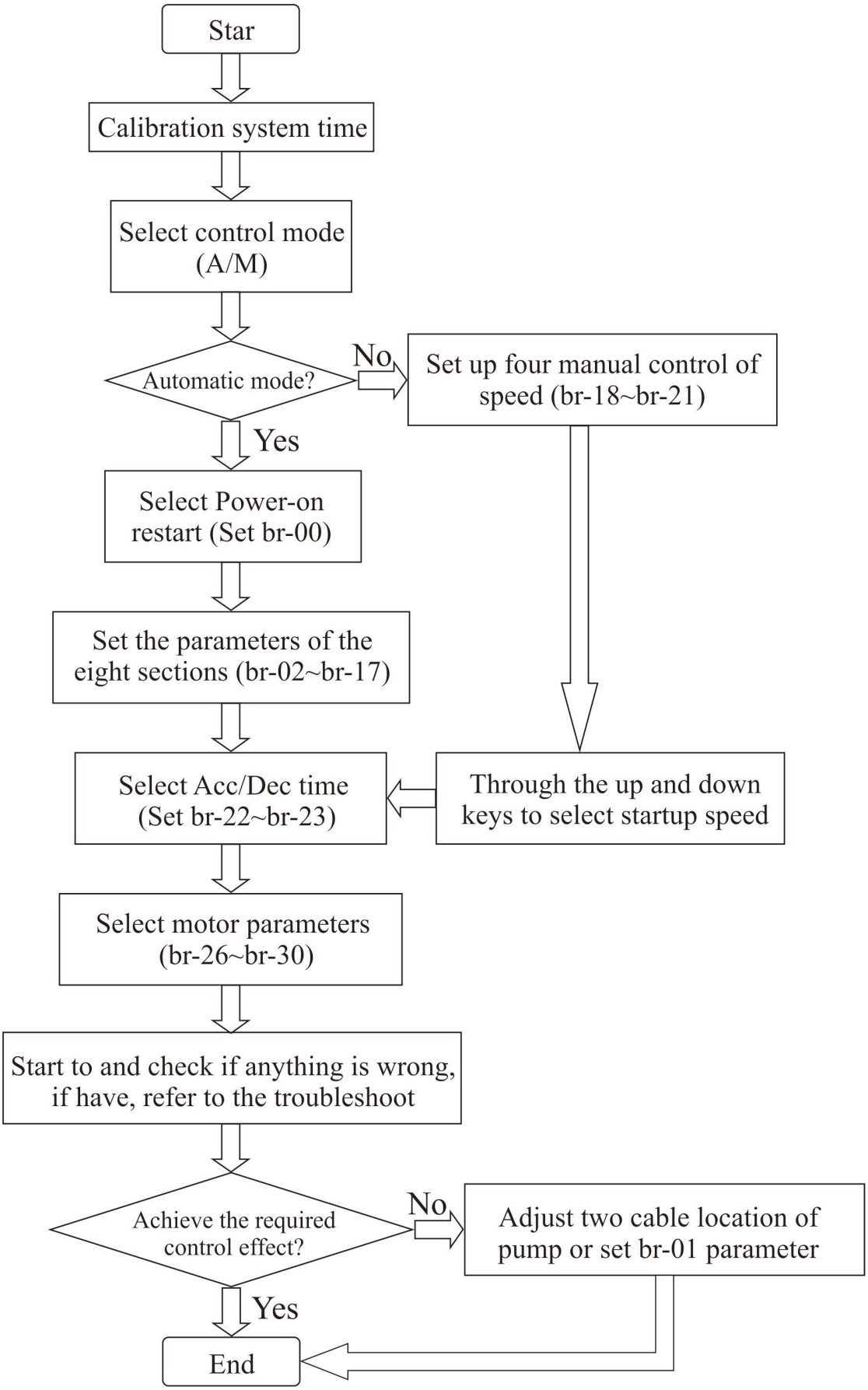

Figure 5.4.1 Flow chart of quick testing

⚠ WARNING
Please input according to motor, protection of overload

5.7 The Application of 8 Sections in Auto. Mode

Auto. mode is the working mode that can automatically switch speed by itself within each cycle for 8 sections per day. Such as, A, B, C, D, E, F, G and H are the 8 sections, and their rated parameters need to be set when you using them. After setting parameters, the first is to check if the function indicator of auto. mode is light on or not. Make sure it is light on and then press the key "**RUN**", the system will run automatically at a speed corresponding to 8 sections that you set and automatically switch its speed according to real time. However, if the function indicator which is light on is not auto. mode but manual mode, it need to first switch to auto.mode by pressing the key "A M" and then start to run by pressing key "**RUN**".

The description of cycle working mode for 8 sections as shown below: (pleas refer to parameter description when setting parameters)

Section	Time	Speed
A	Ta=br-02	br-03
	Tb=br-04	
B	Tb=br-04	br-05
	Tc=br-06	
C	Tc=br-06	br-07
	Td=br-08	
D	Td=br-08	br-09
	Te=br-10	
E	Te=br-10	br-11
	Tf=br-12	
F	Tf=br-12	br-13
	Tg=br-14	
G	Tg=br-14	br-15
	Th=br-16	
H	Th=br-16	br-17
	Ta=br-02	

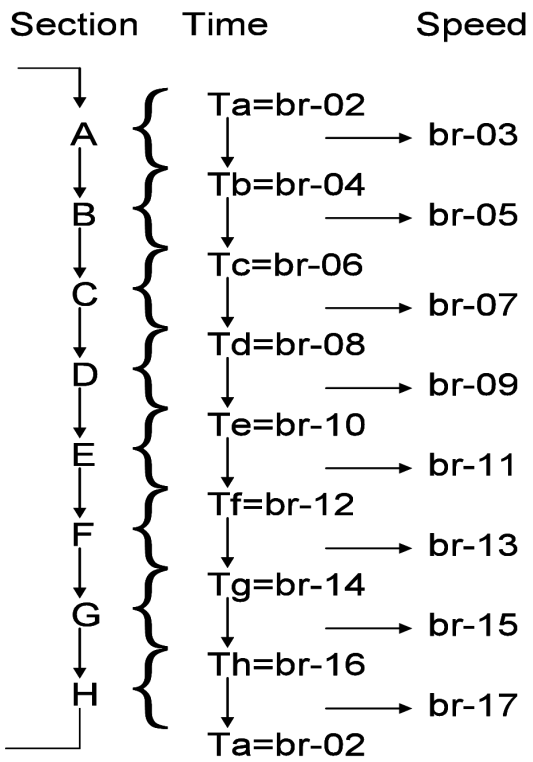

Figure 5.5.1 8 day-parts and the order of cycle working

Note: A.....G and H, there are parameters corresponding to 8 sections (that is,

br-02~br-17) need to be set. If you just want four sections in one day, the remainder sections which is not to be used need to be set as same as the previous section respectively.

5.7.1 Apply to change speeds automatically to multiple speeds within each cycle in one day

Example 1: At 6:00am turn on at 2850rpm, at 9:00am switch to 2700rpm, at 11:10am switch to 2100rpm, at 1:15pm switch to 2950rpm, at 4:50pm switch to 1000rpm, at 7:30pm switch to 2000rpm, at 9:00pm switch to 500rpm, then, 11:20 turn off.

Parameter setting:

Time setting		Speed setting (rpm)	
Time	Parameters setting	Speed	Parameters setting
6:00am	br-02=06-00	2850	br-03=2850
9:00am	br-04=09-00	2700	br-05=2700
11:10am	br-06=11-10	2100	br-07=2100
1:15pm	br-08=13-15	2950	br-09=2950
4:50pm	br-10=16-50	1000	br-11=1000
7:30pm	br-12=19-30	2000	br-13=2000
9:00pm	br-14=21-00	500	br-15=500
11:20pm	br-16=11-20	0 (Stop)	br-17= 0

After setting parameter completely, pump start to run by pressing key “RUN”, and the controller will operate according to the speed corresponding to real-time of this system.

Example 2: At 8:10am increase to 2950rpm, at 12:00am switch to 2500rpm, at 7:00pm switch to 1000rpm, at 11:00pm decrease to 340 rpm.

Parameters setting:

Time setting		Speed setting (rpm)	
Time	Parameter setting	Speed	Parameter setting
8:10am	br-02=08-10	2950	br-03=2950
12:00am	br-04=12-00	2500	br-05=2500
7:00pm	br-06=19-00	1000	br-07=1000
11:00pm	br-08=23-00	340	br-09=340
	br-10 is same with br-08		br-11 is same with br-09
	br-12 is same with br-10		br-13 is same with br-11
	br-14 is same with br-12		br-15 is same with br-13

	br-16 is same with br-14		br-17 is same with br-15
Note: A.....G and H, there are parameters corresponding to 8 sections (that is, br-02~br-17) need to be set. , the remainder time sections which is not to be used need to be set as same as the previous section respectively.			

5.7.2 Apply to turn on and off by itself 2 times per day and change speeds automatically to multiple speeds within each cycle

Example 3: 8:00am turn on at 2850rpm, at 10:00am switch to 2200rpm, at 11:30am switch to 1500rpm, at 1:00pm switch off. Then, 5:00pm turn on at 2950rpm, at 6:00pm switch to 2000rpm, and at 7:15pm turn off.

Parameter Setting:

Time setting		Speed setting (rpm)	
Time	Parameter Setting	Speed	Parameter Setting
8:00am	br-02=08-00	2850	br-03=2850
10:00am	br-04=10-00	2200	br-05=2200
11:30am	br-06=11-30	1500	br-07=1500
1:00pm	br-08=13-00	0 (Stop)	br-09=0
5:00pm	br-10=17-00	2950	br-11=2950
6:00pm	br-12=18-00	2000	br-13=2000
7:15pm	br-14=19-15	0 (Stop)	br-15=0
	br-16 is same with br-14		br-17 is same with br-15
Note: A.....G and H, there are parameters corresponding to 8 sections (that is, br-02~br-17) need to be set. , the remainder time sections which is not to be used need to be set as same as the previous section respectively.			

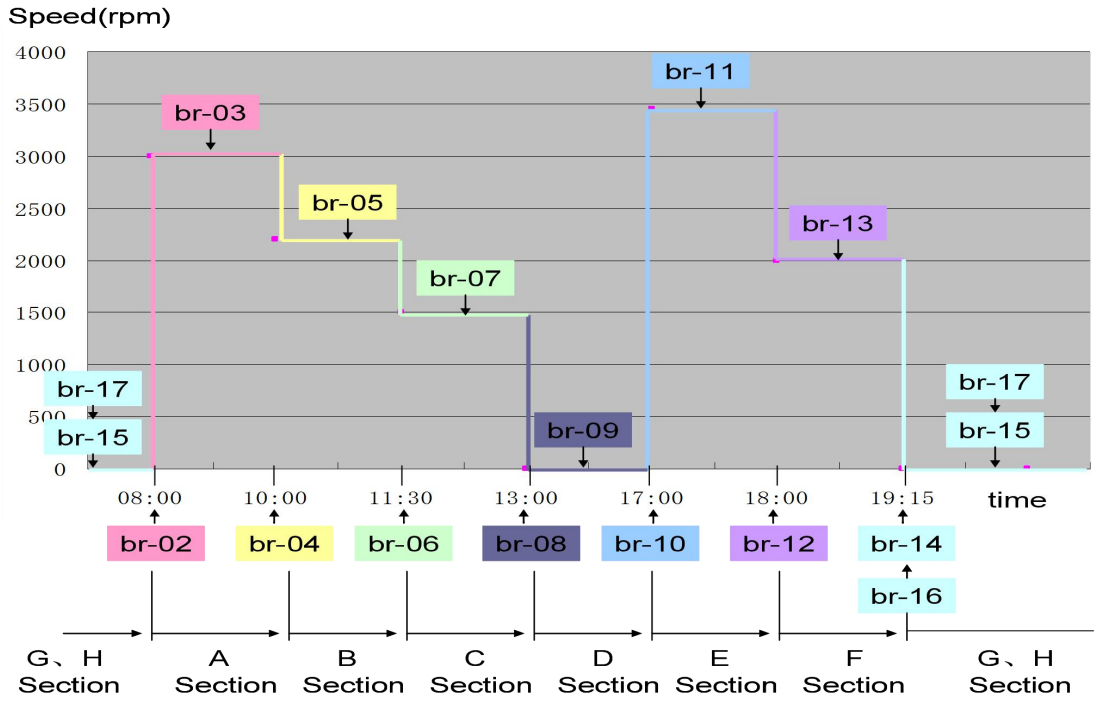

Figure 5.5.2 The schematic of cycle working for example 3

As shown in figure 4.10, pump turn on automatically at 2850rmp at 8:00am every day, at 10:00am switch to 2200rmp, then, 11:30am automatically switch to 1500rmp, and at 1:00pm switch off……, at 5:00pm start to run again at a speed of 2950rmp, at 6:00pm switch to 2000rmp, and at 7:15pm turn off to wait for next day.

5.7.3 Apply to turn on and off by itself 3 times per day and change speeds automatically to multiple speeds within each cycle

Example 4: 7:00am turn on at 2950rpm, at 9:00am switch to 2500rpm, at 11:00am switch to 1700rpm, at 12:00am switch off. Then, 1:40pm turn on at 1300rpm, at 5:00pm switch off again, and at 8:00pm turn on at 2100rpm, at 11:10pm turn off to wait for next day.

Parameter setting:

Time setting		Speed setting(rpm)	
Time	Parameter setting	Speed	Parameter setting
7:00am	br-02=07-00	2950	br-03=2950
9:00am	br-04=9-00	2500	br-05=2500
11:00am	br-06=11-00	1700	br-07=1700
12:00pm	br-08=12-00	0 (Stop)	br-09=0
1:40pm	br-10=13-40	1300	br-11=1300
5:00pm	br-12=17-00	0 （stop）	br-13=0
8:00pm	br-14=20-00	2100	br-15=2100
11:10pm	br-16=23-10	0 （stop）	br-17= 0
Note: A.....G and H, there are parameters corresponding to 8 sections (that is, br-02 ~ br-17) need to be set. , the remainder time sections which is not to be used need to be set as same as the previous section respectively.			

5.7.4 Apply to turn on and off by itself 4 times per day and change speeds automatically to multiple speeds within each cycle

Example 5: 8:30am turn on at 2950rpm, at 11:00am switch off, at 12:00am turn on at 2400rpm, at 3:00pm switch off. Then, 5:30pm turn on at 2850rpm, at 7:00pm switch off, and at 9:00pm turn on at 2950rpm, at 12:00pm turn off to wait for next day.

Parameter Setting:

Time setting		Speed setting(rpm)	
Time	Parameter setting	Speed	Parameter setting
8:30am	br-02=08-30	2950	br-03=2950

11:00am	br-04=11-00	0 (stop)	br-05=0
12:00pm	br-06=12-00	2400	br-07=2400
3:00pm	br-08=15-00	0 (stop)	br-09=0
5:30pm	br-10=17-30	2850	br-11=2850
7:00pm	br-12=19-00	0 (stop)	br-13=0
9:00pm	br-14=21-00	2950	br-15=2950
00:00am	br-16=00-00	0 (stop)	br-17= 0

5.8 Apply to Manual Control to Change Speeds

Example: Pump can be changed to different speeds between the speeds of 1200rpm, 1450 rpm, 2250 rpm, and 2950 rpm by Manual control.

(1) Parameter Setting:

br-18 =1200: The first manual gear is 1200rpm

br-19 =1450: The second manual gear is 1450rpm

br-20 =2250: The third manual gear is 2250rpm

br-21 =2950: The fourth manual gear is 2950rpm

(2) Operation:

In the stop status, firstly, press "**A/M**" key to enter the manual mode (Manual lamp is on light), which represent controller can be switched to different speed by ▲ and▼ key. Then, we should select a speed that you expected, finally press the "**RUN**" key to start. Certainly, controller also can be switched to different speed by ▲ or ▼ key during operating.

5 PARAMETER INSTRUCTION

Code	Name	Range	Default	Instruction	Remark
br-00	**Power-on restart**	**0~1**	**1**	**If there is a power failure, restart when power on**	**If the controller suddenly losses power while running, it restarts automatically when power on again. The system will run at full speed for one minute and then exit to the speed of current system.**

Code	Name	Range	Default	Instruction	Remark
br-01	Motor rotating direction	0~1	0	0: forward 1: reverse	
br-02	A section starting time	00-00~23-59h	08-00		A section starting time as H closing time
br-03	A section current speed	0~2950	1450	Display A current speed	
br-04	B section starting time	00-00~23-59h	17-00		B section starting time as A closing time
br-05	B section current speed	0~2950	1950	Display B current speed	
br-06	C section starting time	00-00~23-59h	20-00		C section starting time as B closing time
br-07	C section current speed	0~2950	0	Display C current speed	
br-08	D section starting time	00-00~23-59h	00-00		D section starting time as C closing time
br-09	D section current speed	0~2950	0	Display D current speed	
br-10	E section starting time	00-00~23-59h	00-00		E section starting time as D closing time
br-11	E section current speed	0~2950	0	Display E current speed	
br-12	F section starting time	00-00~23-59h	00-00		F section starting time as E closing time
br-13	F section current speed	0~2950	0	Display F current speed	
br-14	G section starting time	00-00~23-59h	00-00		G section starting time as F closing time
br-15	G section current speed	0~2950	0	Display G current speed	
br-16	H section starting time	00-00~23-59h	00-00		H section starting time as G closing time
br-17	H section current speed	0~2950	0	Display H current speed	
br-18	First manual gear	0~2950	1200		
br-19	Second manual gear	0~2950	1450		
br-20	Third manual gear	0~2950	2250		
br-21	Fourth manual gear	0~2950	2950		
br-22	Acceleration time	0.0~60.0s	5		Entire controller share the parameter

Code	Name	Range	Default	Instruction	Remark
br-23	**Deceleration time**	**0.0~60.0s**	**5**		
br-24	**Parameter display select**	**0x01~0x3F**	**0x0F**	**Bit0: Current Speed Bit1: Preset Speed Bit2: System Time Bit3: DC Bus Voltage Bit4: Output Current Bit5: Reserved**	**Binary Display, Digit of 1 means display; Digit of 0 means hidden**
br-25	**Reset**	**0~1**	**0**	**0: None operation； 1: Factory reset**	**Reset**
br-26	**Motor rated power**	**0.7~7.5kW**	**Model set**		**Please input according to motor, protection of overload**
br-27	**Motor rated voltage**	**100~460V**	**Model set**		
br-28	**Motor rated freq.**	**0~60.00Hz**	**50**		
br-29	**Motor rated speed**	**350~3450 RPM**	**2950**		
br-30	**Motor rated ampere**	**0.1~80.0A**	**Model set**		
br-31	**Reserved**				

6 Controller Running Fault and Trouble Shooting

Fault Code	Fault Type	Reason	Solution
E004	Over-current when acceleration (OC1)	1. Acc time is too short; 2. Load is too heavy; 3. Low input voltage; 4. The capacity of controller is small	1. Increase Acc time; 2. Check the power supply; 3. Select bigger capacity controller
E005	Over-current when deceleration (OC2)	1. Dec time is too short; 2. Load is too heavy; 3. The capacity of controller is small	1. Increase Dec time; 2. Increase braking unit; 3. Select bigger capacity controller
E006	Over-current when constant speed running (OC3)	1. Sudden change of load; 2. Low input voltage; 3. The capacity of controller is small	1. Check the load; 2. Check the power supply; 3. Select bigger capacity controller
E007	Over-voltage when acceleration (OV1)	1. High input voltage; 2. Regenerative energy from the motor is too large	1. Check the power supply; 2. Avoid to restart the motor until it stop running completely
E008	Over-voltage when deceleration (OV2)	1. High input voltage; 2. Deceleration time is too short; 3. Load is too heavy	1. Increase Dec time; 2. Check the power supply; 3. Increase braking unit

Fault Code	Fault Type	Reason	Solution
E009	Over-voltage when constant speed running (OV3)	1. High input voltage; 2. Load is too heavy	1. Install input reactor; 2. Increase braking unit
E010	DC bus under-voltage (UV)	Low input voltage	Check the grid's input power supply
E011	Motor overload (OL1)	1. Low input voltage; 2. Improper overload protection threshold of motor; 3. Sudden change of load; 4. The capacity of motor is too small	1. Check the power supply; 2. Set the rated current of motor properly; 3. Check the load, adjust the value of torque boost; 4. Select proper capacity motor
E012	Controller overload (OL2)	1. Acc time is too short; 2. Restart the motor when it is decelerating; 3. Low input voltage; 4. Load is too heavy	1. Increase Acc time; 2. Avoid to restart the motor until it stop running completely; 3. Check the power supply; 4. Select bigger capacity controller
E015	Rectify overheat (OH1)	1. Sudden over-current; 2. Input/output side has short circuit; 3. Cooling fans of controller stopped or damaged; 4. Obstruction of ventilation channel; 5. Ambient temperature is too high; 6. Carrier frequency is too high; 7. Near heat source; 8. Wires or connectors of control board are loose; 9. Auxiliary power supply unit is damaged or low driving voltage for IGBT; 10. Power module bridge is damaged; 11. Control board is abnormal	1. Refer to measures of over-current 2. Check the wiring 3. Replace cooling fans; 4. Clear the ventilation channel; 5. Install cooling unit; 6. Decrease carrier frequency; 7. Remove the heat source; 8. Check the wires and connectors; 9. Ask supplier for support;
E016	IGBT overheat (OH2)		
E019	Current detection fault (ITE)	1. Wires or connectors of control board are loose; 2. Auxiliary power supply unit is damaged; 3. Current detector is damaged or amplifying circuit is abnormal	1. Check the wiring and connectors 2. Ask supplier for support

Agent: